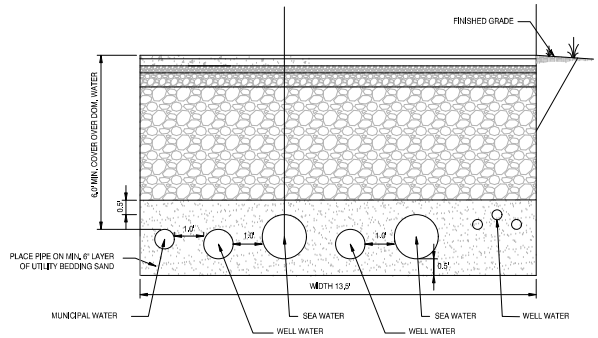

COMBINED WATER PIPE TRENCH (E9)
NOT TO SCALE

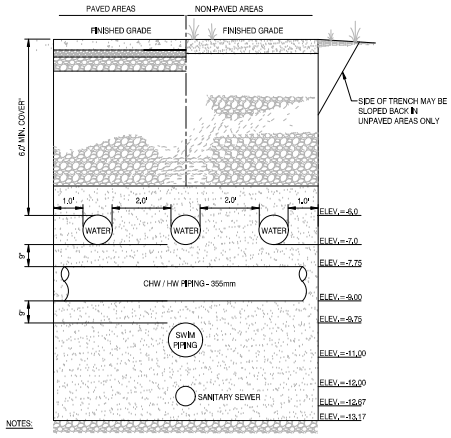

NOTES:

1. BRACING AND SHEETING OR OTHER TRENCH PROTECTION TO BE PROVIDED TO MEET APPLICABLE STATE AND O.S.H.A. SAFETY STANDARDS. ALL SUCH TRENCH PROTECTION TO BE THE RESPONSIBILITY OF THE CONTRACTOR.
2. SEE PLANS FOR UTILITY CROSSING LOCATIONS.

TYPICAL UTILITY COORDINATION DETAIL (E4)
NOT TO SCALE

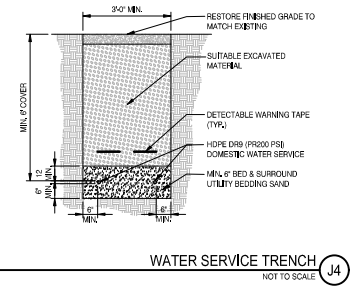

WATER SERVICE TRENCH (J4)
NOT TO SCALE

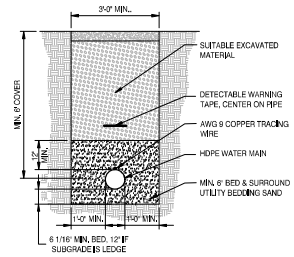

WATER MAIN TRENCH (J1)
NOT TO SCALE

WATER SERVICE NOTES:

1. ALL HDPE WATER MAIN PIPING SHALL MEET AWWA C906. DETECTABLE WARNING TAPE SHALL BE INSTALLED ALONG TOP ALL PLASTIC PIPING.
2. ALL FITTINGS SHALL MEET AWWA C110, AND SHALL BE CEMENT LINED IN ACCORDANCE WITH AWWA C104, WITH A MINIMUM PRESSURE RATING OF 250PSI.
3. GATE VALVES SHALL BE IRON BODY BRONZE MOUNTED RESILINET SEAT, NON-RISING STEM IN ACCORDANCE WITH AWWA C509. VALVES SHALL OPEN LEFT AND SAHLL BE MUELLER A2370-20 OR EQUAL.
4. HYDRANT BRANCHES SHALL BE CONSTRUCTED USING CLASS 52 DUCTILE IRON TO AWWA C-151/A21.51.96, JOINTS TO AWWA C-111.

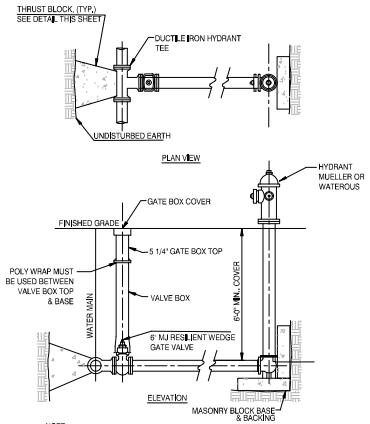

NOTE:

HYDRANT INSTALLATION SHALL MEET BELFAST WATER DISTRICT STANDARDS. COORDINATE ALL WORK WITH THE DISTRICT PRIOR TO CONSTRUCTION

FIRE HYDRANT (E1)
NOT TO SCALE

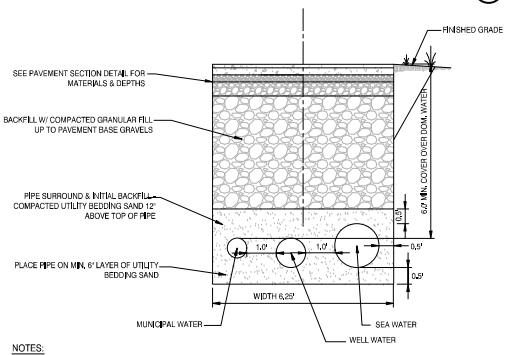

NOTES:

1. BRACING AND SHEETING OR OTHER TRENCH PROTECTION TO BE PROVIDED TO MEET APPLICABLE STATE AND O.S.H.A. SAFETY STANDARDS. ALL SUCH TRENCH PROTECTION TO BE THE RESPONSIBILITY OF THE CONTRACTOR.
2. ALL WATER MAINS, SERVICES & APPURTENANCES, TRENCHING, AND BACKFILLING SHALL MEET THE STANDARDS AND SPECIFICATIONS OF BELFAST WATER DISTRICT

COMBINED WATER PIPE TRENCH (A9)
NOT TO SCALE

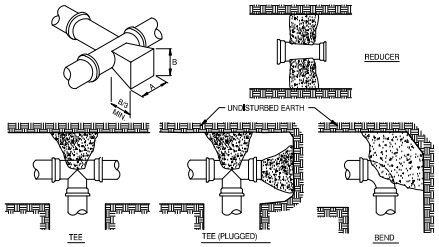

THRUST BLOCK DIMENSIONS								
FITTING SIZES	TEES & PLUGS		90° BEND		45° BEND & WYE		REDUCER, 11 1/4° & 22 1/2° BENDS	
	A	B	A	B	A	B	A	B
6"	2'-0"	1'-11"	2'-5"	2'-2"	1'-10"	1'-7"	1'-9"	0'-10"
8"	2'-8"	2'-6"	3'-2"	3'-0"	2'-5"	2'-1"	1'-9"	1'-6"
12"	4'-0"	3'-10"	4'-8"	4'-8"	3'-8"	3'-3"	2'-7"	2'-3"

1. DIMENSIONS ARE BASED ON 150 PSI WATER PRESSURE AND 2000 PSF SOIL BEARING CAPACITY.
2. ALL THRUST BLOCKS SHALL BE CAST USING PLYWOOD FORMS SUCH THAT NO MJ FITTINGS ARE COVERED.
3. WEDGE ACTION MJ RETAINER GLANDS TO BE USED AT ALL FITTINGS IN CONJUNCTION WITH THRUST BLOCKS.

WATER MAIN THRUST BLOCKS (A4)
NOT TO SCALE

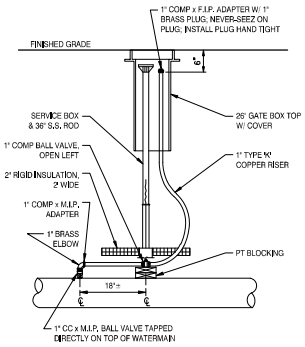

NOTE:

TAPS MADE ON PIPE OTHER THAN D.I. OR C.I. MUST INCORPORATE A SERVICE SADDLE APPROVED BY THE AUGUSTA UTILITY DISTRICT.

AIR RELEASE VALVE (A1)
NOT TO SCALE

REV	DESCRIPTION	DATE
0	ISSUED FOR PERMIT	5-14-19

ISSUED FOR PERMIT
5-14-19
CURRENT ISSUE STATUS.

STATE OF MAINE
ANDREW D. JOHNSTON
NO. 9994
5-14-19
LICENSED
PROFESSIONAL ENGINEER

TRUE NORTH:

SMRT Architects and Engineers
144 Fore Street/P.O. BOX 618
Portland, Maine 04104
1.877.700.7678
www.smrtinc.com
ARCHITECTURE | ENGINEERING | PLANNING | INTERIORS | ENERGY
SMRT

RANSOM Consulting Engineers and Scientists
Ransom Consulting Engineers and Scientists
400 Commercial Street, Suite 400
Portland, Maine 04101

NORDIC AQUAFARMS
285 NORTHPORT AVENUE
BELFAST, MAINE

WATER
UTILITY DETAILS

SHEET TITLE:

0 1/2" 1" 2" 3"

SCALE: AS SHOWN

PROJECT MANAGER:	ADB	PROJECT NO:	18076
A/E OF RECORD:	ADJ		
JOB CAPTAIN:	SP		
DRAWN BY:	WSM		
SMRT FILE:	CU502-18076	SHEET No.	CU502

NOT FOR CONSTRUCTION