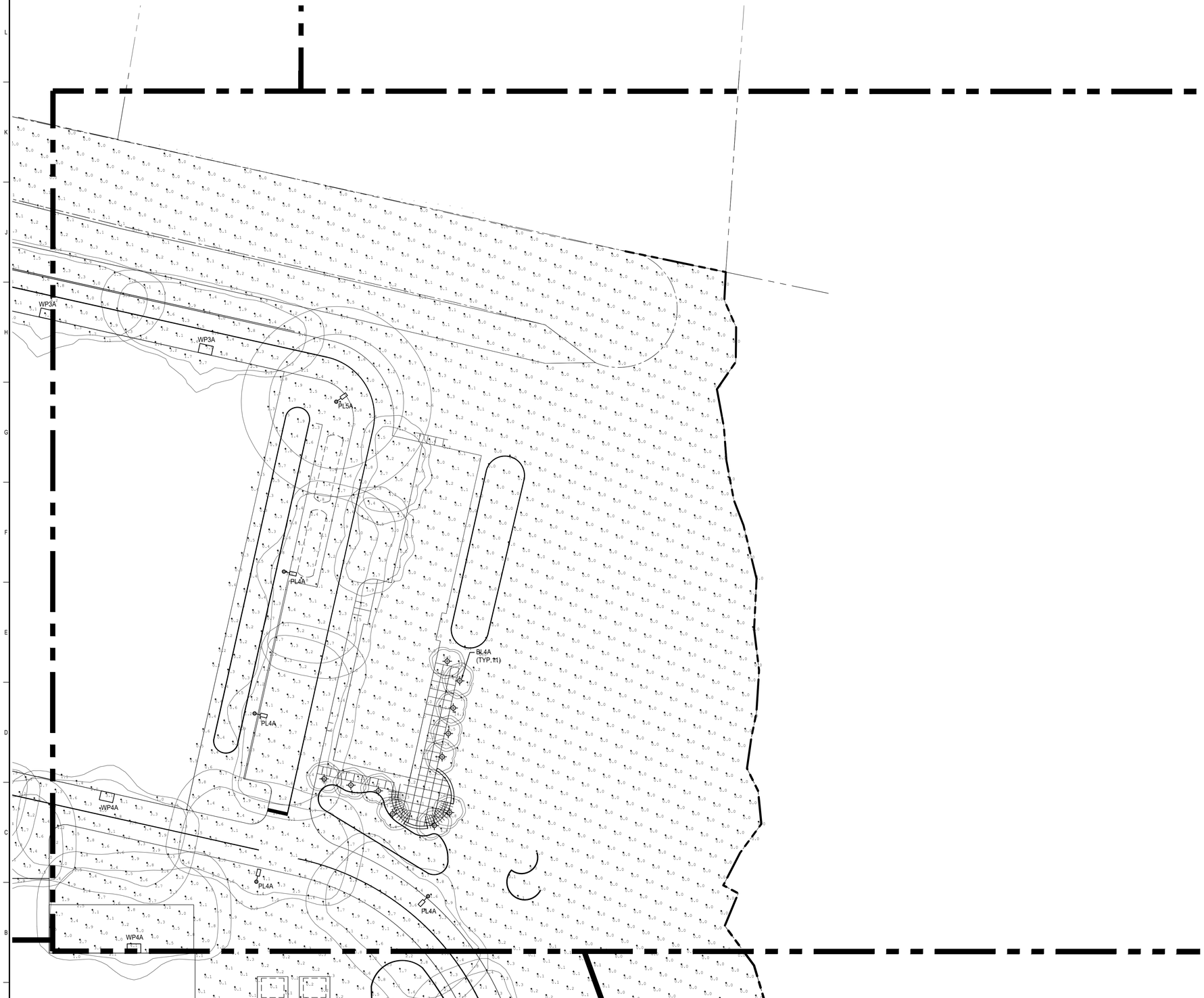

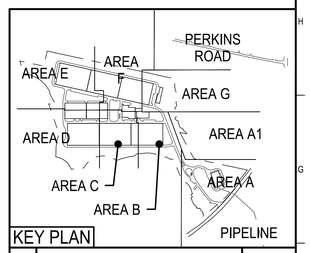

KEY PLAN

REV	DESCRIPTION	DATE

ISSUED FOR PERMIT

CURRENT ISSUE STATUS:

TRUE NORTH

TRUE NORTH:

SMRT Architects and Engineers
144 Fore Street/P.O. BOX 618
Portland, Maine 04104
1.877.700.7678
www.smrtinc.com
ARCHITECTURE | ENGINEERING | PLANNING | INTERIORS | ENERGY
SMRT

RANSOM Consulting Engineers and Scientists
Ransom Consulting Engineers and Scientists
400 Commercial Street, Suite 400
Portland, Maine 04101

NORDIC AQUAFARMS
285 NORTHPORT AVENUE

BELFAST, MAINE

ELECTRICAL SITE PLAN
AREA G

SHEET TITLE:

0 15' 30' 60' 90'

SCALE: 1" = 30'

PROJECT MANAGER:	ADB	PROJECT NO:	18076
A/E OF RECORD:	WRH		
JOB CAPTAIN:	SP		
DRAWN BY:	RBB		
SMRT FILE:	ES107-18076	SHEET No.	ES107

©COPYRIGHT 2018 SMRT INC

NOT FOR CONSTRUCTION

24x36